PARTS ILLUSTRATION

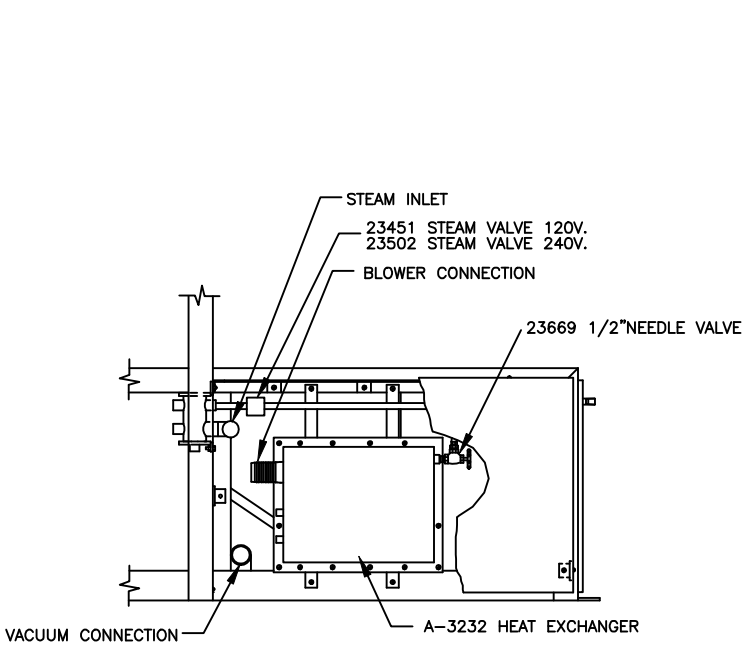
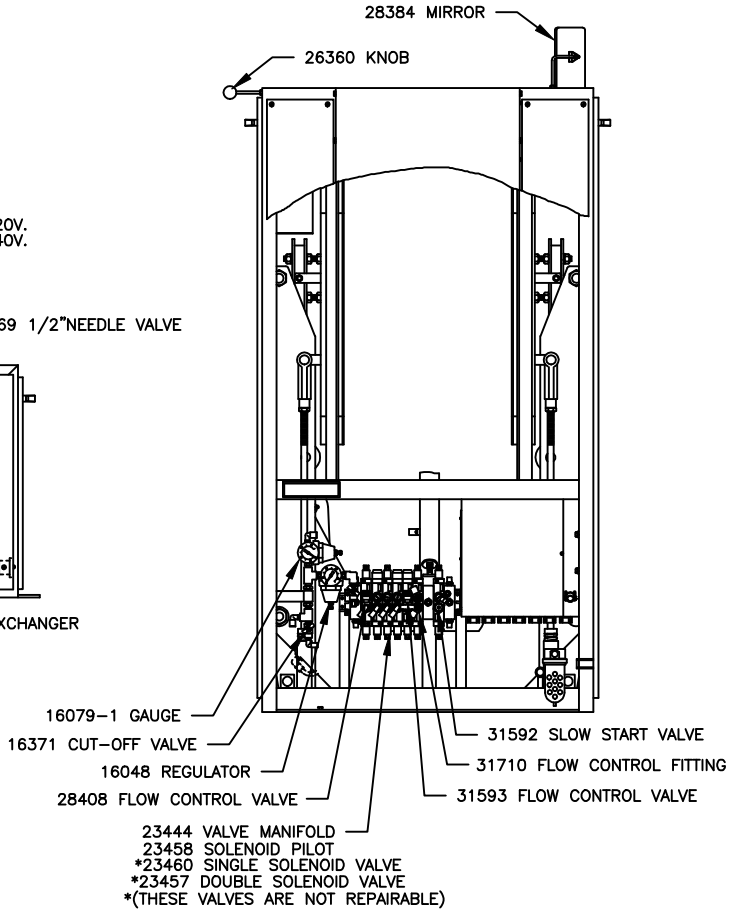
LEFT REAR VIEW